ENGINE LUBRICATION & COOLING SYSTEMS

SECTION LC

CONTENTS

Supplemental Restraint System (SRS) "AIR BAG"

The Supplemental Restraint System "AIR BAG", used along with a seat belt, helps to reduce the risk or severity of injury to the driver and front passenger in a frontal collision. The Supplemental Restraint System consists of air bag modules (located in the center of the steering wheel and in the instrument panel on the passenger side), a diagnosis sensor unit, a crash zone sensor (4WD models), warning lamp, wiring harness and spiral cable.

The vehicle is equipped with a passenger air bag deactivation switch. Because no rear seat exists where a rear-facing child restraint can be placed, the switch is designed to turn off the passenger air bag so that a rear-facing child restraint can be used in the front passenger seat. The switch is located in the center of the instrument panel, near the ashtray. When the switch is turned to the ON position, the passenger air bag is enabled and could inflate in a frontal collision. When the switch is turned to the OFF position, the passenger air bag is disabled and will not inflate in a frontal collision. A passenger air bag OFF indicator on the instrument panel lights up when the passenger air bag is switched OFF. The driver air bag always remains enabled and is not affected by the passenger air bag deactivation switch.

Information necessary to service the system safely is included in the **RS section** of this Service Manual.

WARNING:

- **To avoid rendering the SRS inoperative, which could increase the risk of personal injury or death in the event of a collision which would result in air bag inflation, all maintenance should be performed by an authorized NISSAN dealer.**
- **Improper maintenance, including incorrect removal and installation of the SRS, can lead to personal injury caused by unintentional activation of the system.**
- **Do not use electrical test equipment on any circuit related to the SRS unless instructed to in this Service Manual. SRS wiring harnesses are covered with yellow insulation either just before the harness connectors or on the complete harness, for easy identification.**
- **The vehicle is equipped with a passenger air bag deactivation switch which can be operated by the customer. When the passenger air bag is switched OFF, the passenger air bag is disabled and will not inflate in a frontal collision. When the passenger air bag is switched ON, the passenger air bag is enabled and could inflate in a frontal collision. After SRS maintenance or repair, make sure the passenger air bag deactivation switch is in the same position (ON or OFF) as when the vehicle arrived for service.**

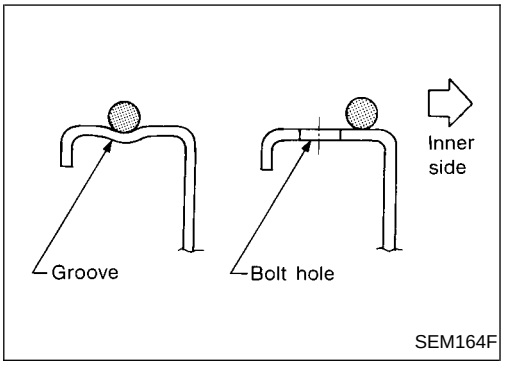

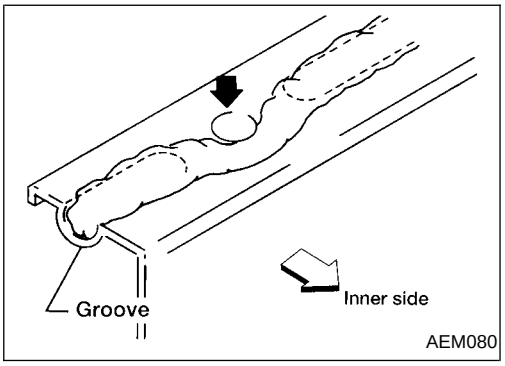

Liquid Gasket Application Procedure

a. Use a scraper to remove all traces of old liquid gasket from mating surfaces and grooves. Also, completely clean any oil from these areas.
b. Apply a continuous bead of liquid gasket to mating surfaces. (Use Genuine RTV Silicone Sealant Part No. 999 MP-A7007 or equivalent.)
   - For oil pan, be sure liquid gasket diameter is 3.5 to 4.5 mm (0.138 to 0.177 in).
   - For areas except oil pan, be sure liquid gasket diameter is 2.0 to 3.0 mm (0.079 to 0.118 in).
c. Apply liquid gasket around the inner side of bolt holes (unless otherwise specified).
d. Assembly should be done within 5 minutes after coating.
e. Wait at least 30 minutes before refilling engine oil and engine coolant.

Special Service Tools

The actual shapes of Kent-Moore tools may differ from those of special service tools illustrated here.

Tool number (Kent-Moore No.) Tool name	Description	
(J34301-C) Oil pressure gauge set ① (J34301-1) Oil pressure gauge ② (J34301-2) Hoses ③ (J34298) Adapter ④ (J34282-1) Adapter ⑤ (790-301-1230-A) 60° adapter ⑥ (J34301-15) Square socket	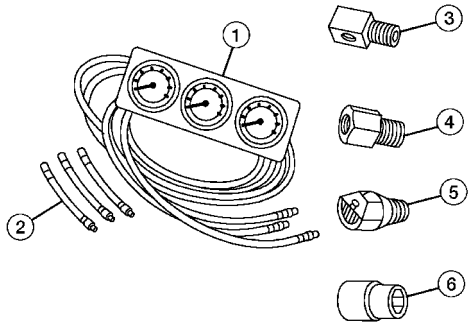 AAT896	Measuring oil pressure **Maximum measuring range:** **1,379 kPa (14 kg/cm^2, 200 psi)**
EG17650301 (J33984-A) Radiator cap tester adapter	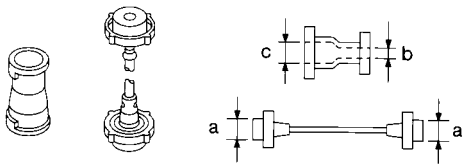 NT564	Adapting radiator cap tester to radiator filler neck **a: 28 (1.10) dia.** **b: 31.4 (1.236) dia.** **c: 41.3 (1.626) dia.** Unit: mm (in)
WS39930000 (—) Tube presser	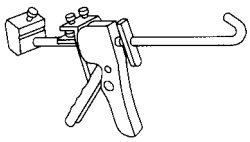 NT052	Pressing the tube of liquid gasket
KV10115801 (J38956) Oil filter wrench	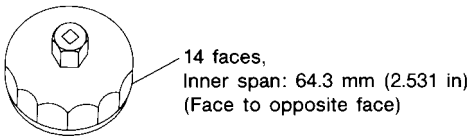 NT362	Removing oil filter

Lubrication Circuit

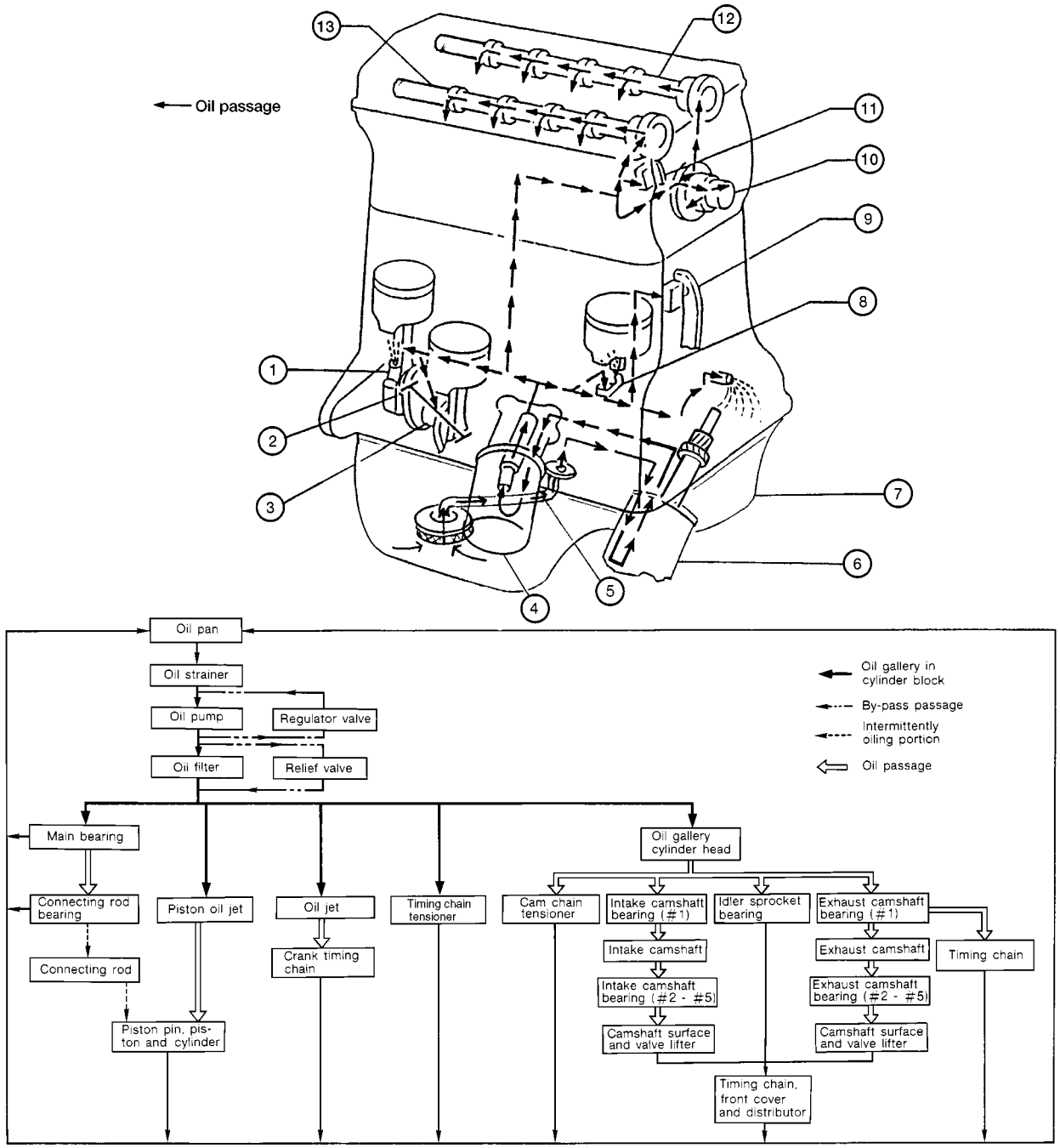

ALC086

① Connecting rod
② Connecting rod bearing
③ Main bearing
④ Oil filter
⑤ Oil strainer
⑥ Oil pump
⑦ Oil pan
⑧ Piston oil jet
⑨ Timing chain tensioner
⑩ Idler sprocket
⑪ Upper timing chain tensioner
⑫ Exhaust camshaft
⑬ Intake camshaft

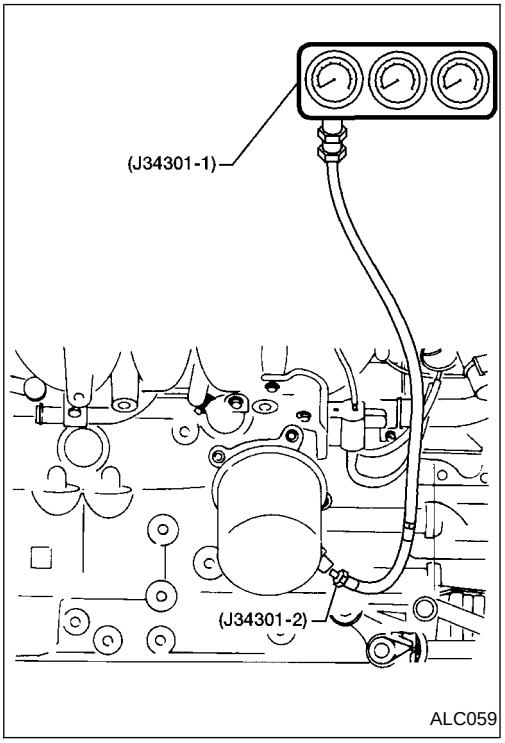

Oil Pressure Check

WARNING:

- **Be careful not to burn yourself, as the engine and oil may be hot.**
- **For M/T models, put gearshift lever in Neutral "N" position. For A/T models, put selector lever in Park "P" position.**

1. Check oil level.
2. Remove oil pressure switch.
3. Install pressure gauge.
4. Start engine and warm it up to normal operating temperature.
5. Check oil pressure with engine running under no-load.

Engine speed rpm	Approximate discharge pressure kPa (kg/cm^2, psi)
Idle speed	More than 78 (0.8, 11)
3,000	412 - 481 (4.2 - 4.9, 60 - 70)

- **If difference is extreme, check oil passage and oil pump for oil leaks.**

6. Install oil pressure switch with sealant.
   : 12.25 - 17.15 N·m (1.3 - 1.7 kg-m, 9 - 12 ft-lb)

Oil Pump

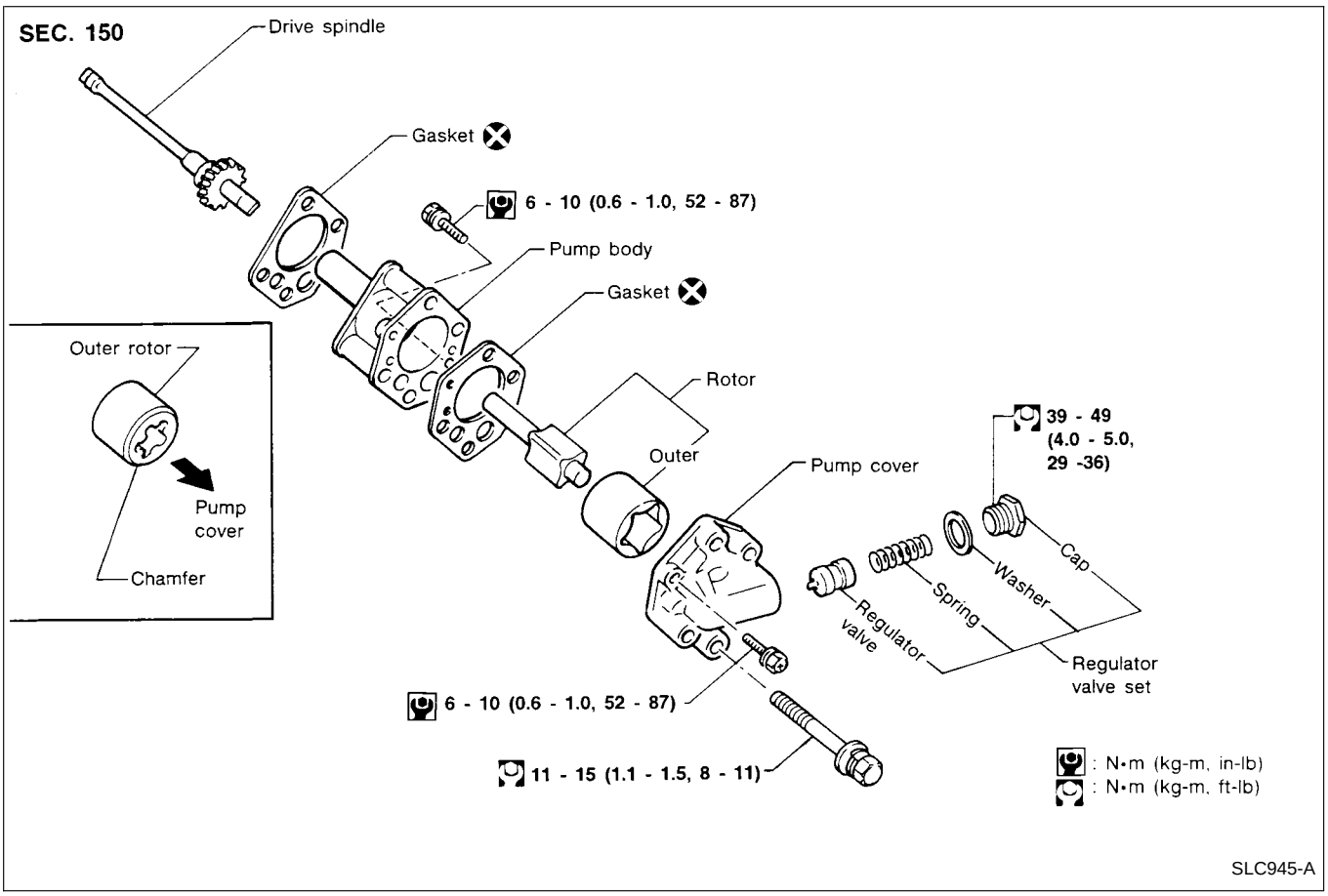

Oil Pump (Cont'd)

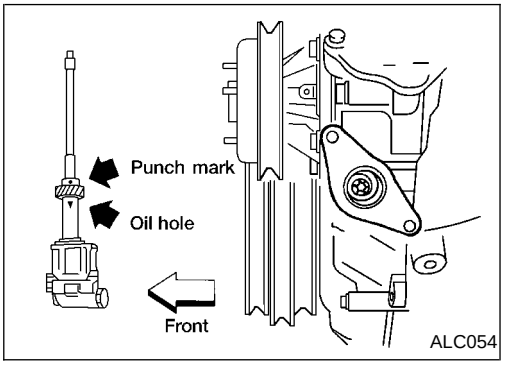

- **Always replace with new oil seal and gasket.**
- **When removing oil pump, turn crankshaft so that No. 1 piston is at TDC on its compression stroke.**
- **When installing oil pump, apply engine oil to gears, then align punchmark on drive spindle and oil hole on oil pump.**

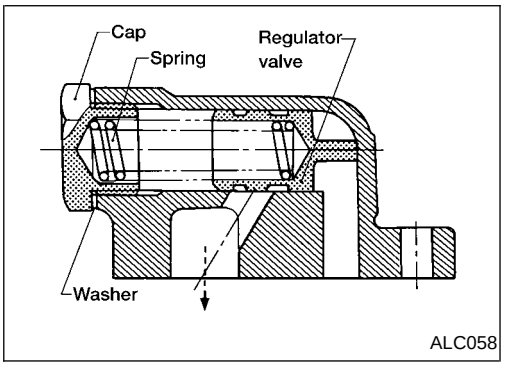

REGULATOR VALVE INSPECTION

1. Visually inspect components for wear and damage.
2. Check oil pressure regulator valve sliding surface and valve spring.
3. Coat regulator valve with engine oil. Check that it falls smoothly into the valve hole by its own weight.

- **Replace regulator valve set or oil pump assembly, if damaged.**

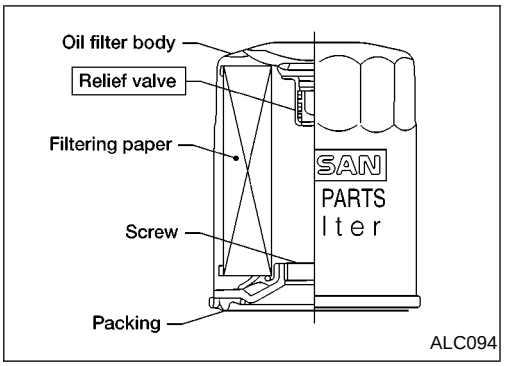

OIL FILTER

The oil filter is a small, full-flow cartridge type and is provided with a relief valve.

- **The new and previous oil filter designs differ from each other and are not interchangeable.**
- **Use Tool KV10115801 (J38956) for removing oil filter.**

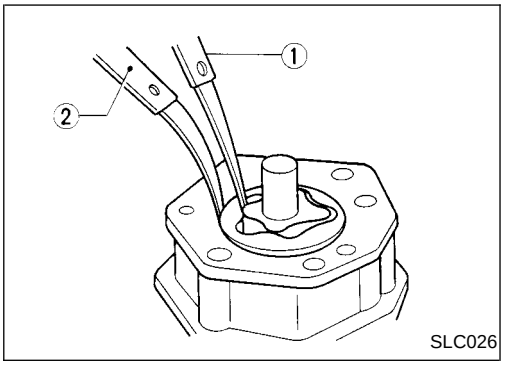

OIL PUMP INSPECTION

Using a feeler gauge, check the following clearances.

Standard clearance: Unit: mm (in)

Rotor tip clearance ①	Less than 0.12 (0.0047)
Outer rotor to body clearance ②	0.15 - 0.21 (0.0059 - 0.0083)
Side clearance (with gasket) ③	0.04 - 0.100 (0.0016 - 0.0039)

- **If the tip clearance (①) exceeds the limit, replace gear set.**
- **If body to gear clearances (②, ③) exceed the limit, replace oil pump assembly.**

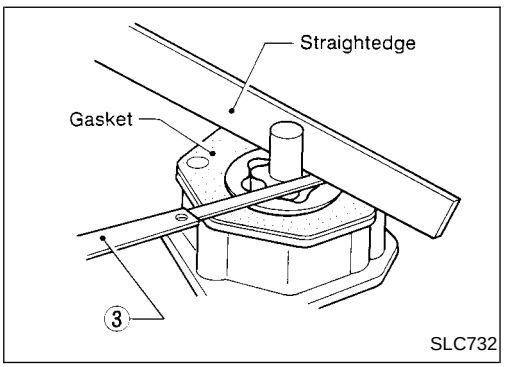

Cooling Circuit

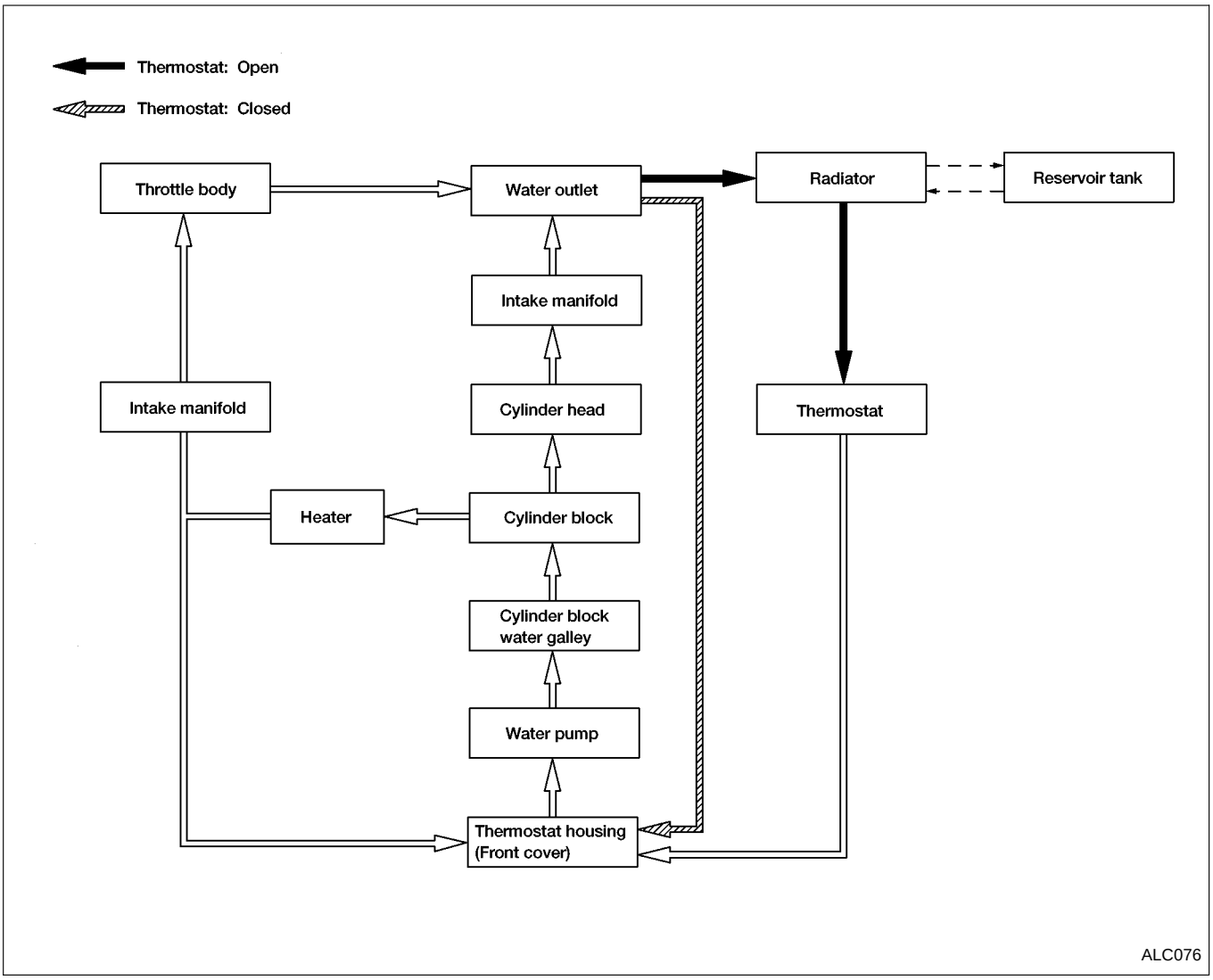

System Check

WARNING:

Never remove the radiator cap when the engine is hot. Serious burns could occur from high pressure coolant escaping from the radiator.

Wrap a thick cloth around the radiator cap. Slowly turn it a quarter turn to allow built up pressure to escape. Carefully remove the radiator cap by turning it all the way.

CHECKING COOLING SYSTEM HOSES

Check hoses for the following:

- Improper attachment
- Leaks
- Cracks
- Damage
- Chafing
- Deterioration

CHECKING RADIATOR

Check radiator for mud or clogging. If necessary, clean radiator as follows.

- Be careful not to bend or damage the radiator fins.

System Check (Cont'd)

- When radiator is cleaned without removal, remove all surrounding parts such as cooling fan, radiator shroud and horns.
- Tape the harness connectors to prevent water from entering.

1. Apply water by hose to the back side of the radiator core vertically downward.
2. Apply water again to all radiator core surfaces once per minute.
3. Stop washing when stains no longer flow out from the radiator.
4. Blow air into the back side of radiator core vertically downward.
   - Use compressed air lower than 5 kg/cm^2 and keep distance more than 30 cm (11.8 in).
5. Blow air again into all the radiator core surfaces once per minute until no water sprays out.

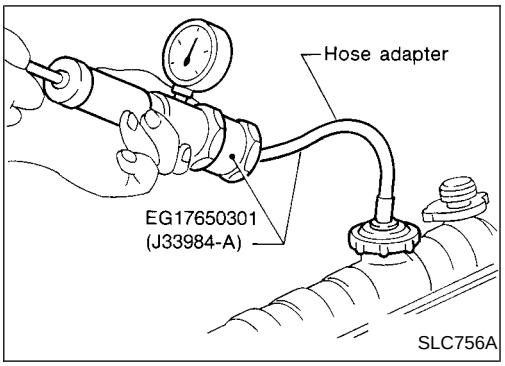

CHECKING COOLING SYSTEM FOR LEAKS

To check for leakage, apply pressure to the cooling system with a radiator cap tester.

Testing pressure:
157 kPa (1.6 kg/cm^2, 23 psi)

CAUTION:
Higher pressure than specified may cause radiator damage.

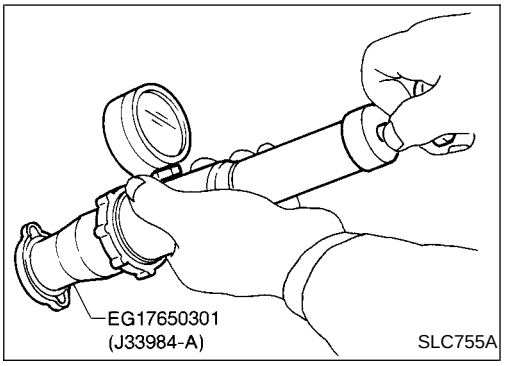

CHECKING RADIATOR CAP

To check radiator cap, apply pressure to radiator cap with a radiator cap tester.

Radiator cap relief pressure:
Standard
78 - 98 kPa (0.8 - 1.0 kg/cm^2, 11 - 14 psi)
Limit
59 - 98 kPa (0.6 - 1.0 kg/cm^2, 9 - 14 psi)

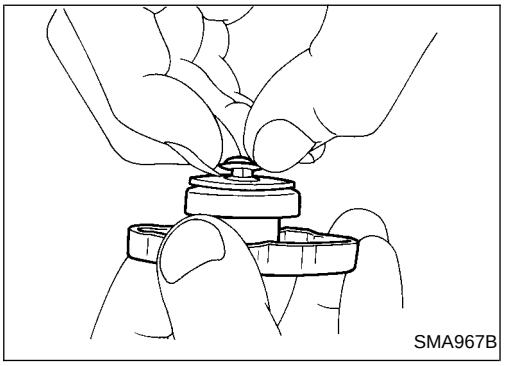

Pull the negative pressure valve to open it.
Check that it closes completely when released.

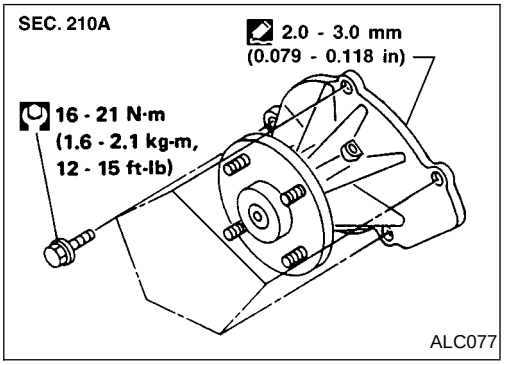

Water Pump

CAUTION:

- **When removing water pump assembly, be careful not to get coolant on drive belts.**
- **Water pump cannot be disassembled and should be replaced as a unit.**
- **After installing water pump, connect hose and clamp securely. Check for leaks using radiator cap tester.**

REMOVAL

1. Drain coolant from engine.
   Refer to MA section (“Changing Engine Coolant”, “ENGINE MAINTENANCE”).
2. Remove fan coupling with fan.
3. Remove power steering pump drive belt, generator drive belt and A/C compressor drive belt.
4. Remove water pump.

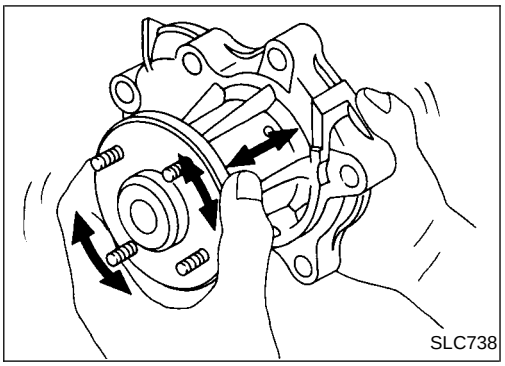

INSPECTION

- Check body assembly for rust or corrosion.
- Check for rough operation due to excessive end play.

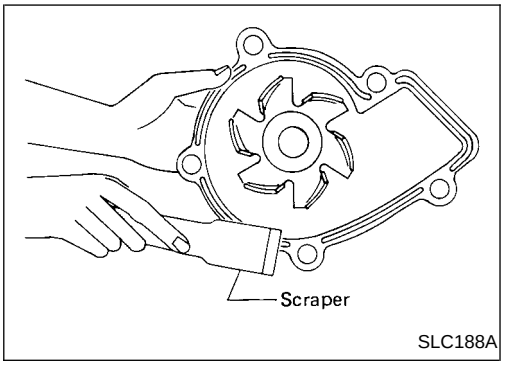

INSTALLATION

1. Use a scraper to remove liquid gasket from water pump.
   - **Also remove traces of liquid gasket from mating surface of cylinder block.**

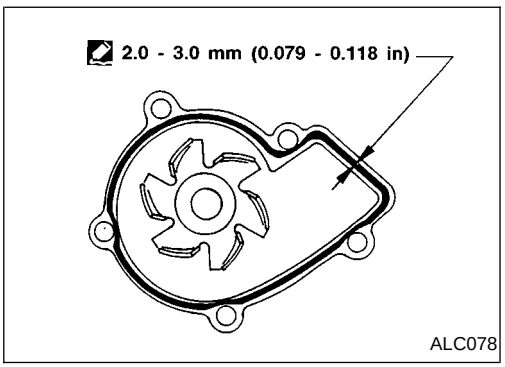

2. Apply a continuous bead of liquid gasket to mating surface of water pump.
   - **Use Genuine RTV Silicone Sealant Part No. 999 MP-A7007 or equivalent.**

When filling radiator with coolant, refer to MA section (“Changing Engine Coolant”, “ENGINE MAINTENANCE”).
When installing drive belts, refer to MA section (“Checking Drive Belts”).

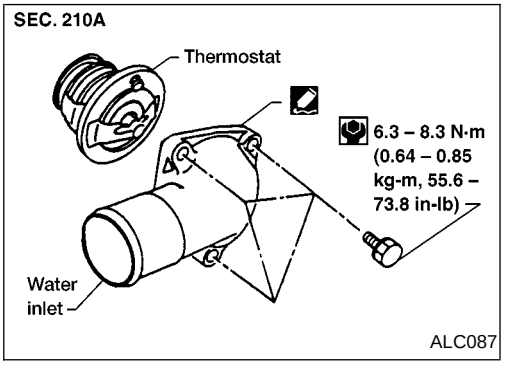

Thermostat

- **Be careful not to spill coolant over engine compartment. Use a rag to absorb coolant.**

REMOVAL

1. Drain coolant from engine. Refer to MA section (“Changing Engine Coolant”, “ENGINE MAINTENANCE”).
2. Remove air cleaner and air duct assembly.
3. Remove water hose from water inlet housing.
4. Remove water inlet housing, then take out thermostat.

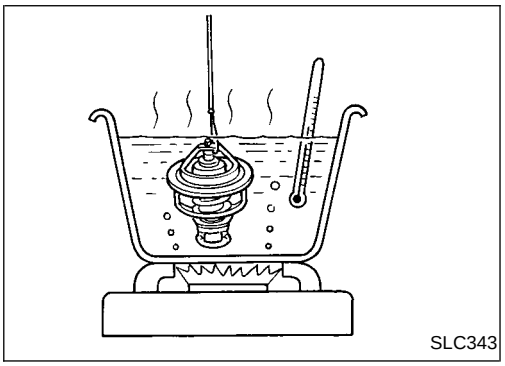

INSPECTION

1. Check valve seating condition at normal room temperature. It should seat tightly.
2. Check valve opening temperature and valve lift.

Valve opening temperature	°C (°F)	76.5 (170)
Valve lift	mm/°C (in/°F)	More than 8/90 (0.31/194)

3. Check if valve closes at 5°C (9°F) below valve opening temperature.

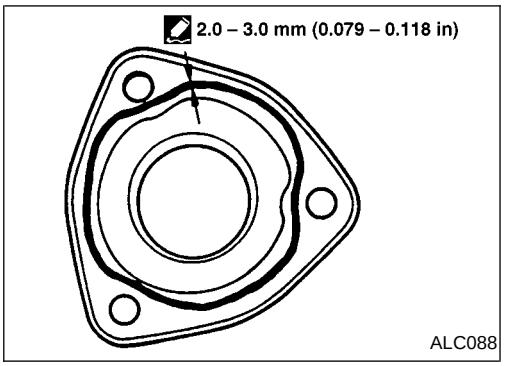

INSTALLATION

1. Use a scraper to remove old liquid gasket from water inlet.
- **Also remove traces of liquid gasket from mating surface of front cover.**
2. Apply a continuous bead of liquid gasket to mating surface of water inlet.
- **Use Genuine RTV Silicone Sealant Part No. 999 MP-A7007 or equivalent.**

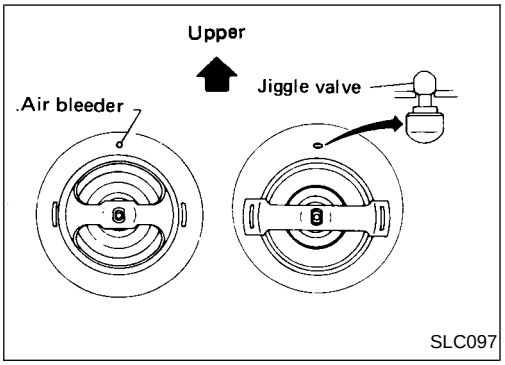

3. Install thermostat with jiggle valve or air bleeder at upper side.
4. Install water inlet housing.
5. Install water hose to water inlet housing.
6. Install air cleaner and air duct assembly.
7. Refill engine coolant. Refer to MA section (“Changing Engine Coolant”, “ENGINE MAINTENANCE”).
- **After installation, run engine for a few minutes and check for leaks.**

Radiator

REMOVAL AND INSTALLATION

1. Remove under cover.
2. Drain coolant from radiator. Refer to MA section (“Changing Engine Coolant”, “ENGINE MAINTENANCE”).
3. Disconnect upper and lower radiator hoses.
4. Remove air cleaner and air duct assembly.
5. Remove lower radiator shroud.
6. Remove radiator shroud.
7. Remove A/T oil cooler hoses (A/T models only).
8. Disconnect coolant reservoir hose.
9. Remove radiator.
10. After replacing radiator, install all parts in reverse order of removal.
11. Refill engine coolant. Refer to MA section (“Changing Engine Coolant”, “ENGINE MAINTENANCE”).

- **After installation, run engine for a few minutes, and check for leaks.**

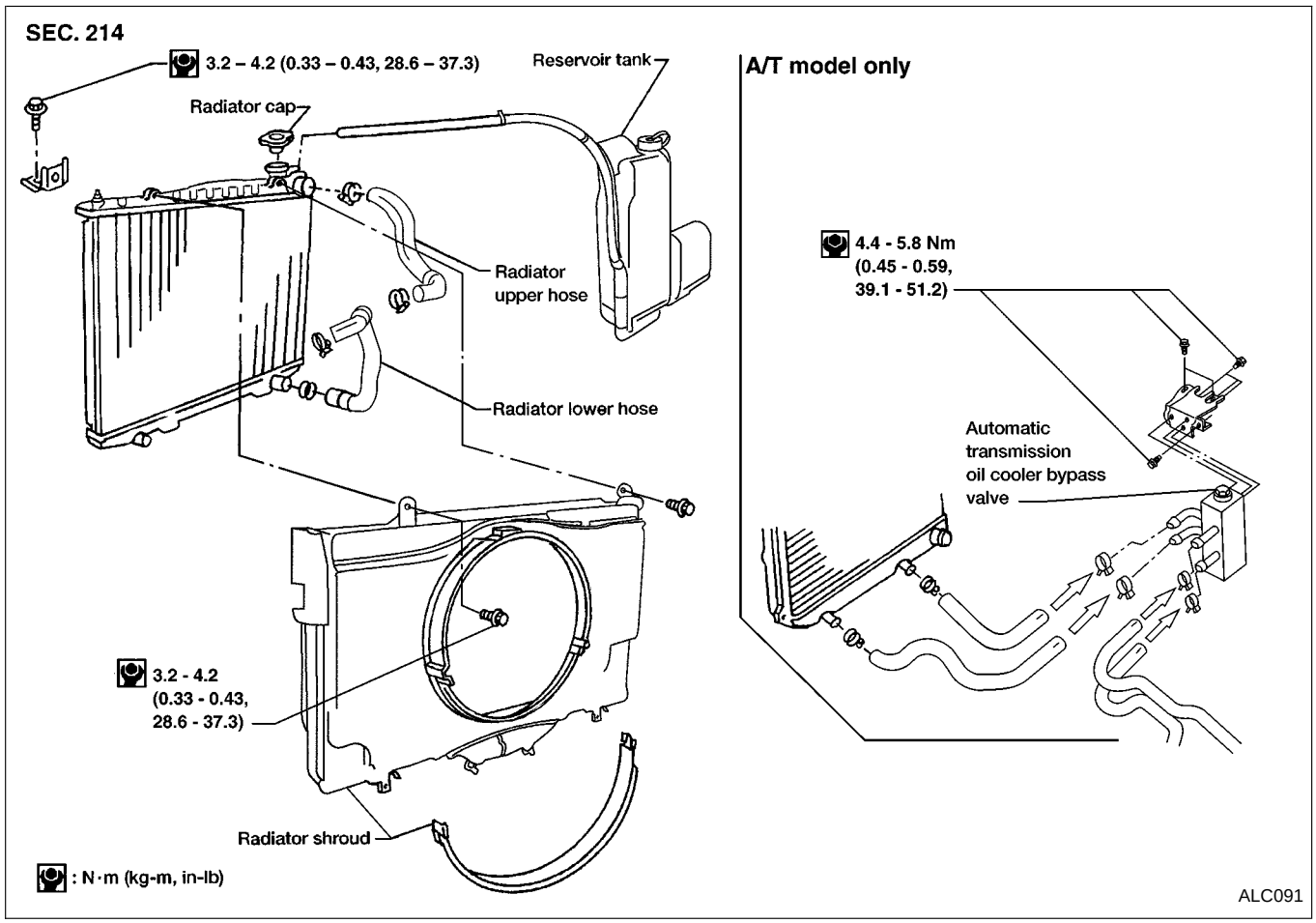

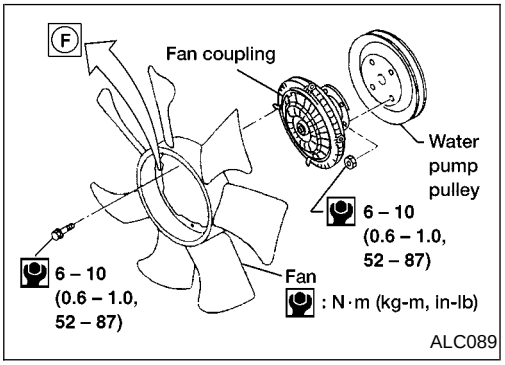

Cooling Fan (Crankshaft driven)

REMOVAL AND INSTALLATION

- Do not release the drive belt tension by removing the fan/water pump pulley.
- Fan coupling cannot be disassembled and should be replaced as a unit. If front mark Ⓕ is present, install fan so that side marked Ⓕ faces the front.
- Install the drive belt only after the fan and fan coupling to water pump flange bolts/nuts have been properly torqued.
- Proper alignment of these components is essential. Improper alignment will cause them to wobble and may eventually cause the fan to separate from the water pump, causing extensive damage.

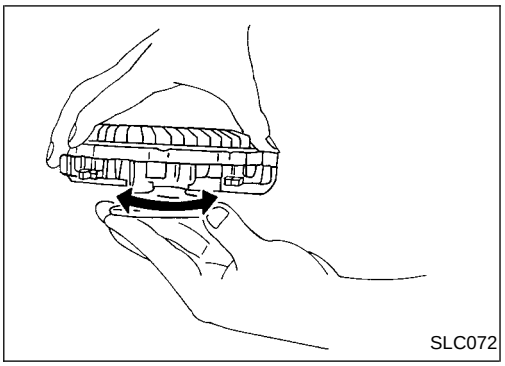

INSPECTION

Check fan coupling for rough operation, silicon oil leakage and bent bimetal.

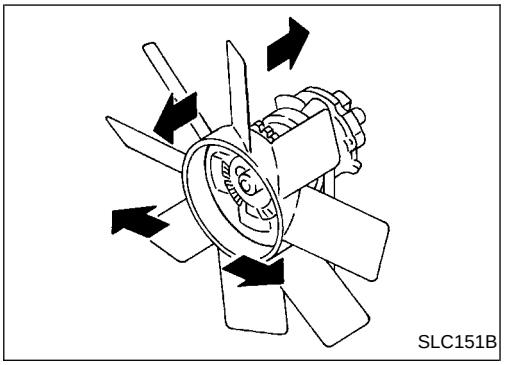

After assembly, verify the fan does not wobble or flap while the engine is running.

WARNING:

- **When the engine is running, keep hands and clothing away from moving parts such as drive belts and fan.**

Refilling engine coolant

For details on refilling engine coolant, refer to MA section (“Changing Engine Coolant”, “ENGINE MAINTENANCE”).

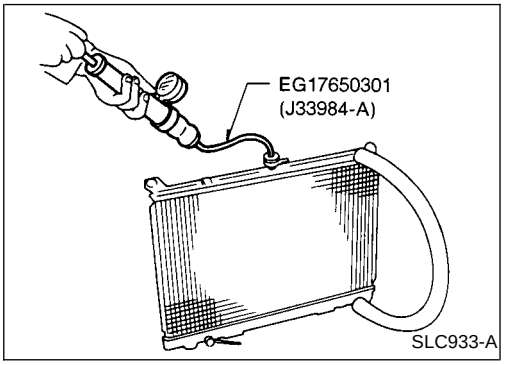

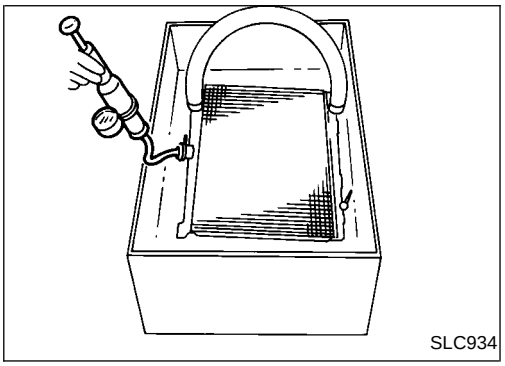

Radiator (Aluminum type)

INSPECTION

1. Apply pressure with Tool.
   Specified pressure value:
   157 kPa (1.6 kg/cm^2, 23 psi)

WARNING:
To prevent the risk of the hose coming undone while under pressure, securely fasten it down with a hose clamp.
Attach a hose to the oil cooler as well. (A/T model only)

2. Check for leakage.

Overheating Cause Analysis

	Symptom		Check items	
Cooling system parts malfunction	Poor heat transfer	Water pump malfunction	Worn or loose drive belt	—
		Thermostat stuck closed	—	
		Damaged fins	Dust contamination or paper clogging	
			Mechanical damage	
		Clogged radiator cooling tube	Excess foreign material (rust, dirt, sand, etc.)	
	Reduced air flow	Fan coupling does not operate	—	—
		High resistance to fan rotation		
		Damaged fan blades		
	Damaged radiator shroud	—	—	—
	Improper coolant mixture ratio	—	—	—
	Poor coolant quality	—	—	—
	Insufficient coolant	Coolant leaks	Cooling hose	Loose clamp
				Cracked hose
			Water pump	Poor sealing
			Radiator cap	Loose
				Poor sealing
			Radiator	O-ring for damage, deterioration or improper fitting
				Cracked radiator tank
				Cracked radiator core
			Reservoir tank	Cracked reservoir tank
		Overflowing reservoir tank	Exhaust gas leaks into cooling system	Cylinder head deterioration
				Cylinder head gasket deterioration
Except cooling system parts malfunction	—	Overload on engine	Abusive driving	High engine rpm under no load
				Driving in low gear for extended time
				Driving at extremely high speed
			Powertrain system malfunction	—
			Installed improper size wheels and tires	
			Dragging brakes	
			Improper ignition timing	
	Blocked or restricted air flow	Blocked bumper	—	—
		Blocked radiator grille	Installed truck brassiere	
			Mud contamination or paper clogging	
		Blocked radiator	—	
		Blocked condenser	—	
		Installed large fog lamp		

Engine Lubrication System

Oil pressure check

Engine speed rpm	Approximate discharge pressure kPa (kg/cm^2, psi)
Idle speed	More than 78 (0.8, 11)
3,000	412 - 481 (4.2 - 4.9, 60 - 70)

Oil pump

Unit: mm (in)

Rotor tip clearance	.....	Less than 0.12 (0.0047)
Outer rotor to body clearance	.....	0.15 - 0.21 (0.0059 - 0.0083)
Side clearance (with gasket)	.....	0.04 - 0.100 (0.0016 - 0.0039)

Engine Cooling System

Thermostat

Valve opening temperature	°C (°F)	76.5 (170)
Valve lift	mm/°C (in/°F)	More than 8/90 (0.31/194)

Radiator

Unit: kPa (kg/cm^2, psi)

Cap relief pressure	Standard	78 - 98 (0.8 - 1.0, 11 - 14)
	Limit	59 - 98 (0.6 - 1.0, 9 - 14)
Leakage test pressure		157 (1.6, 23)

NOTES